MV3-D640I-M01-144-G2

The camera series MV3-D640I-M01-G2 is based on the Sofradir SNAKE InGaAs image sensors with CMOS read out

Features

- Sofradir SNAKE InGaAs image sensor
- 640 x 512 pixel resolution
- Very good SWIR spectral response
- Exceptional SNR up to 1200:1
- Up to 300fps @ full resolution
- Global shutter
- Available in monochrome SWIR
- Extended sensor and camera features
- Reduction of ROI in x- and y-direction increases frame rate
- 256 MROI for hypersprectral imaging
- Up to 12 bit greyscale resolution
- 16 bit output in binning mode
- GigEVision interface

Quantum Efficiency Image Sensor

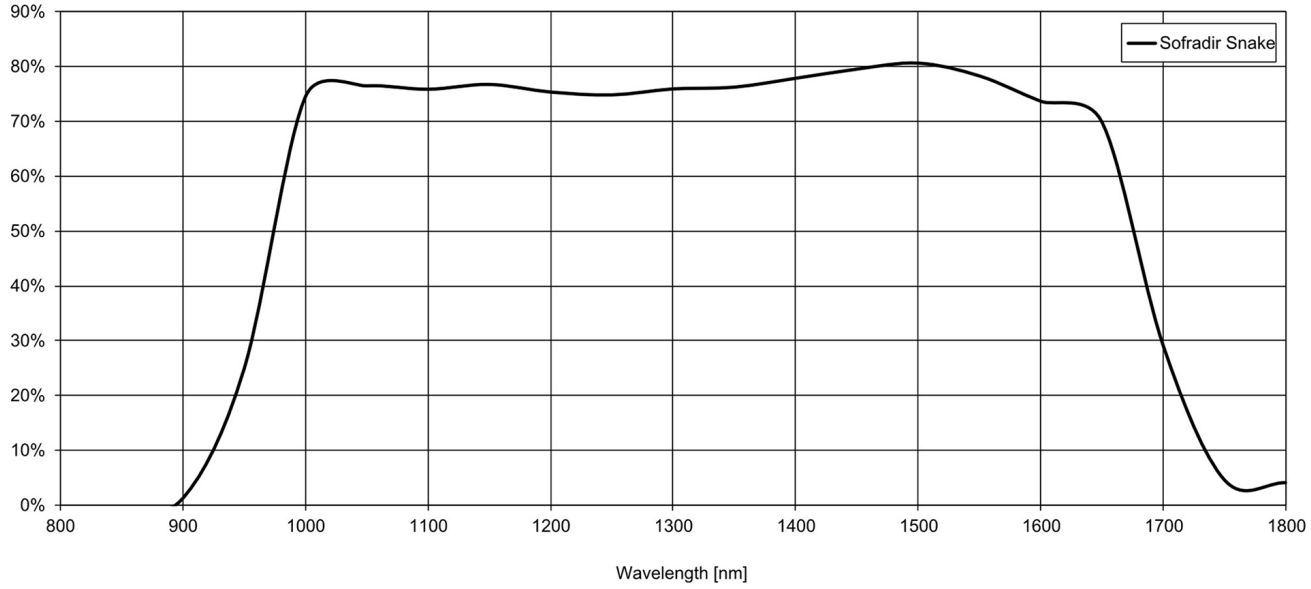

Image Sensor Specifications

Manufacturer / Type	Sofradir, SNAKE
Technology	InGaAs with CMOS read out circuit
Optical format	1"
Optical diagonal	12.3mm
Resolution	640 x 512
Pixel size	15µm x 15µm
Active optical area	9.60mm x 7.68mm
Dark current	TBD
Read out noise	30e-
Full well capacity / SNR	1.44Me- / 1200:1
Spectral range	SWIR: 930 to 1700nm (to 10% of peak responsivity)
Responsivity	SWIR: TBD DN / (J/m²) @ 1550nm / 8bit
Quantum Efficiency	SWIR < 70% from 1000 to 1600nm
Optical fill factor	> 95%
Dynamic range	60dB in linear mode
Characteristic curve	Linear
Shutter mode	Global shutter

Camera Specifications

Interface	GigE
Frame rate	300fps
Pixel clock	72MHz
Camera taps	2
Greyscale resolution	8Bit / 10Bit / 12Bit / 16Bit in binning mode
Fixed pattern noise (FPN)	< 1DN RMS @ 8bit
Exposure time range	11µs - 460ms
Analog gain	n/a
Digital gain	0.1 to 15.99 (FineGain)
Trigger Modes	Free running (non triggered), external Trigger, SWTrigger
Features	Configurable region of interest (ROI), Up to 256 regions of interest (MROI), Image correction, 2 look-up tables (12-to-8Bit) on user-defined image region (Region-LUT), Constant frame rate independent of exposure time, Crosshairs overlay on the image, Temperature stabilisation with Peltier cooler (TEC), Temperature monitoring of sensor and camera, Camera informations readable over SDK, Low trigger delay and low trigger jitter, Extended trigger input and strobe output functionality, Status line in picture
Operation temperature / moisture	0°C ... + 50°C / 20% ... 80%
Storage temperature / moisture	-25°C ... 60°C / 20% ... 95%
Power supply	+12VDC (-10%) ... +12VDC (+10%)
Power consumption	< 5.5W without TEC
Lens mount	C-Mount (CS-Mount optional)
I/O Inputs	2x Opto-isolated
I/O Outputs	2x Opto-isolated
Dimensions	60 x 60 x 60.8mm³
Mass	265g
Connector I/O (Power)	Fischer S1031Z012-130
Connector Interface	x-coded M12
Conformity	CE / RoHS / WEEE
IP Code	IP40

Connectors

Pin	I/O Type	Name	Description
1	O	ISO_OUT0	General purpose output 0 (opto-isolated)
2	O	ISO_OUT1	General purpose output 1 (opto-isolated)
3	O	RESERVED	Do not connect
4	PWR	GND	Camera ground
5	PWR	VDD	Camera power +12 V DC (± 10%)
6	PWR	ISO_GND	Signal ground for opto-isolated output signals
7	I	ISO_IN0	General purpose input 0 (opto-isolated)
8	I	ISO_IN1	General purpose input 1 (opto-isolated)
9	O	RESERVED	Do not connect
10	O	RESERVED	Do not connect
11	O	RESERVED	Do not connect
12	O	RESERVED	Do not connect

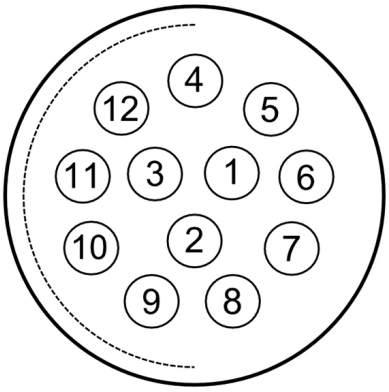

Dimensions

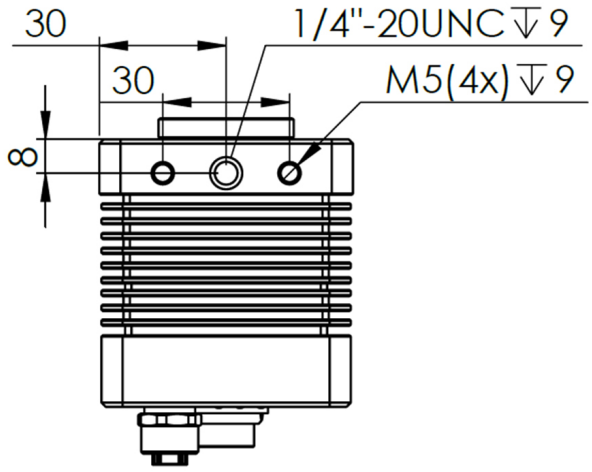

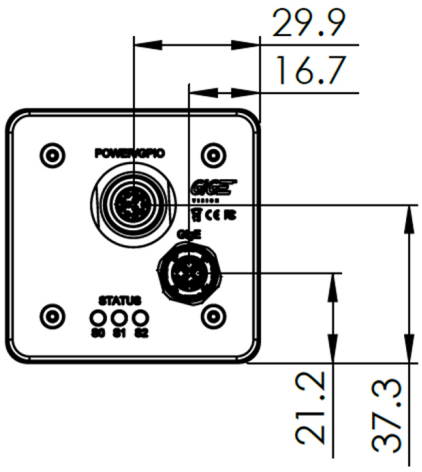

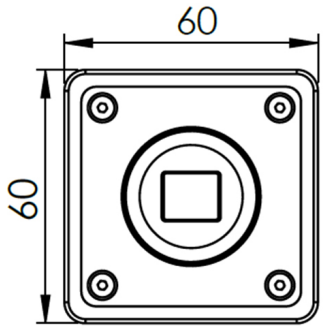

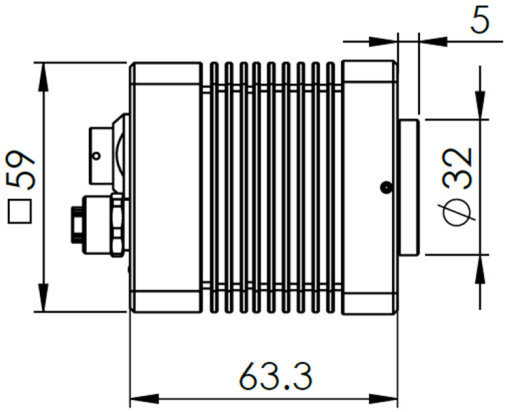

Explanation

DN DigitalNumber (equals to LSB)
e- Electrons

Order Information

MV3-D640I-M01-144-G2	SWIR model

Compatibility

Photonfocus AG
Bahnhofplatz 10
CH-8853 Lachen SZ
Switzerland

Phone: +41 55 451 00 00
www.photonfocus.com
info@photonfocus.com

MV3-D640I-M01-144-CL

The camera series MV3-D640I-M01-CL is based on the Sofradir SNAKE InGaAs image sensors with CMOS read out

Features

- Sofradir SNAKE InGaAs image sensor
- 640 x 512 pixel resolution
- Very good SWIR spectral response
- Exceptional SNR up to 1200:1
- Up to 300fps @ full resolution
- Global shutter
- Available in monochrome SWIR
- Extended sensor and camera features
- Reduction of ROI in x- and y-direction increases frame rate
- 256 MROI for hypersprectral imaging
- Up to 12 bit greyscale resolution
- 16 bit in 1 tap output mode
- CameraLink® interface

Quantum Efficiency Image Sensor

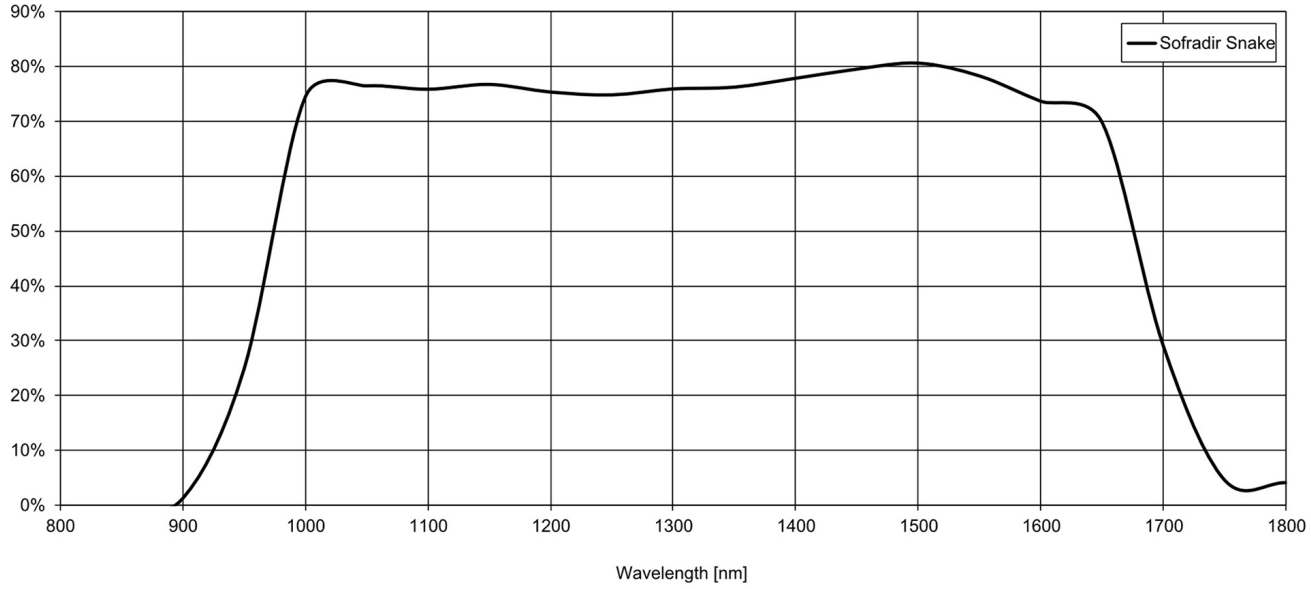

Image Sensor Specifications

Manufacturer / Type	Sofradir, SNAKE
Technology	InGaAs with CMOS read out circuit
Optical format	1"
Optical diagonal	12.3mm
Resolution	640 x 512
Pixel size	15µm x 15µm
Active optical area	9.60mm x 7.68mm
Dark current	TBD
Read out noise	30e-
Full well capacity / SNR	1.44Me- / 1200:1
Spectral range	SWIR: 930 to 1700nm (to 10% of peak responsivity)
Responsivity	SWIR: TBD DN / (J/m²) @ 1550nm / 8bit
Quantum Efficiency	SWIR < 70% from 1000 to 1600nm
Optical fill factor	> 95%
Dynamic range	60dB in linear mode
Characteristic curve	Linear
Shutter mode	Global shutter

Camera Specifications

Interface	Camera Link
Frame rate	300fps
Pixel clock	72MHz
Camera taps	2
Greyscale resolution	8Bit / 10Bit / 12Bit / 16Bit single tap in binning mode
Fixed pattern noise (FPN)	< 1DN RMS @ 8bit
Exposure time range	11µs - 460ms
Analog gain	n/a
Digital gain	0.1 to 15.99 (FineGain)
Trigger Modes	Free running (non triggered), external Trigger, SWTrigger
Features	Configurable region of interest (ROI), Up to 256 regions of interest (MROI), Image correction, 2 look-up tables (12-to-8Bit) on user-defined image region (Region-LUT), Constant frame rate independent of exposure time, Crosshairs overlay on the image, Temperature stabilisation with Peltier cooler (TEC), Temperature monitoring of sensor and camera, Camera informations readable over SDK, Low trigger delay and low trigger jitter, Extended trigger input and strobe output functionality, Status line in picture
Operation temperature / moisture	0°C ... + 50°C / 20% ... 80%
Storage temperature / moisture	-25°C ... 60°C / 20% ... 95%
Power supply	+12VDC (-10%) ... +12VDC (+10%)
Power consumption	< 4.5W without TEC
Lens mount	C-Mount (CS-Mount optional)
I/O Inputs	2x Opto-isolated
I/O Outputs	2x Opto-isolated
Dimensions	60 x 60 x 60.8mm³
Mass	265g
Connector I/O (Power)	Fischer S1031Z012-130
Connector Interface	CameraLink Base (MDR26)
Conformity	CE / RoHS / WEEE
IP Code	IP40

Connectors

Pin	I/O Type	Name	Description
1	O	ISO_OUT0	General purpose output 0 (opto-isolated)
2	O	ISO_OUT1	General purpose output 1 (opto-isolated)
3	O	RESERVED	Do not connect
4	PWR	GND	Camera ground
5	PWR	VDD	Camera power +12 V DC (± 10%)
6	PWR	ISO_GND	Signal ground for opto-isolated output signals
7	I	ISO_IN0	General purpose input 0 (opto-isolated)
8	I	ISO_IN1	General purpose input 1 (opto-isolated)
9	O	RESERVED	Do not connect
10	O	RESERVED	Do not connect
11	O	RESERVED	Do not connect
12	O	RESERVED	Do not connect

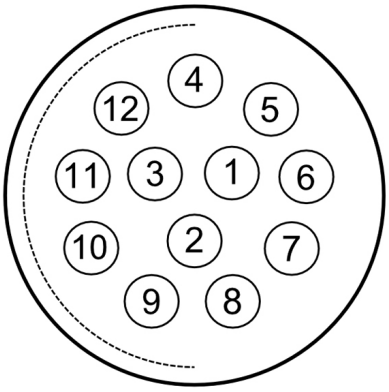

Dimensions

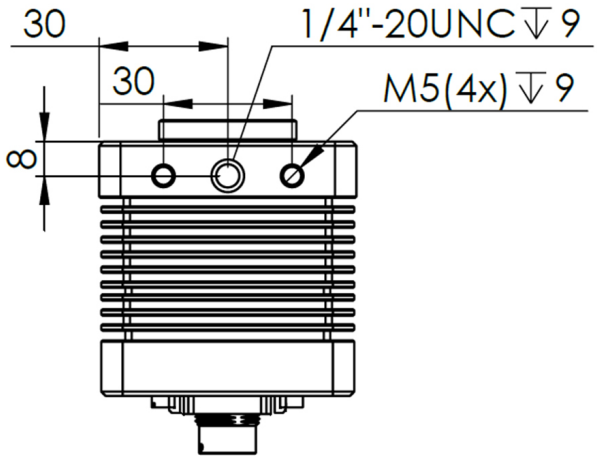

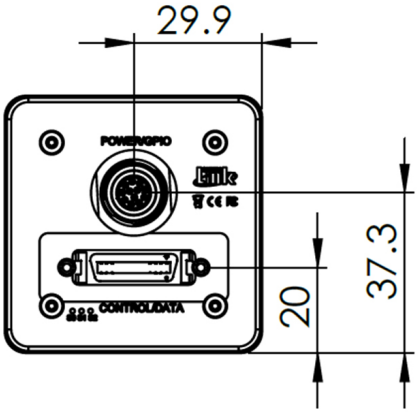

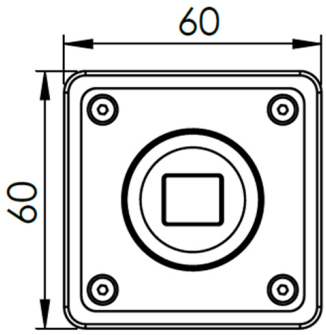

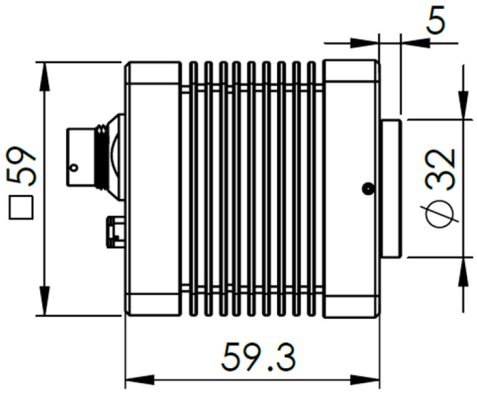

Explanation

DN DigitalNumber (equals to LSB)
e- Electrons

Order Information

MV3-D640I-M01-144-CL	SWIR model

Photonfocus AG
Bahnhofplatz 10
CH-8853 Lachen SZ
Switzerland

Phone: +41 55 451 00 00
www.photonfocus.com
info@photonfocus.com

MV3-D320I-T01-40-G2

The camera series MV3-D320I-T01-G2 is based on the Chunghwa FPA-320x256-K InGaAs image sensors with CMOS read out

Features

- Chunghwa FPA-320x256-K InGaAs image sensor
- 320 x 256 pixel resolution
- Very good SWIR spectral response
- Exceptional SNR up to 1870:1
- Up to 344fps @ full resolution
- Global shutter
- Available in monochrome SWIR
- Extended sensor and camera features
- Reduction of ROI in x- and y-direction increases frame rate
- 128 MROI for hypersprectral imaging
- Up to 12 bit greyscale resolution
- 16 bit output in binning mode
- GigEVision interface

Quantum Efficiency Image Sensor

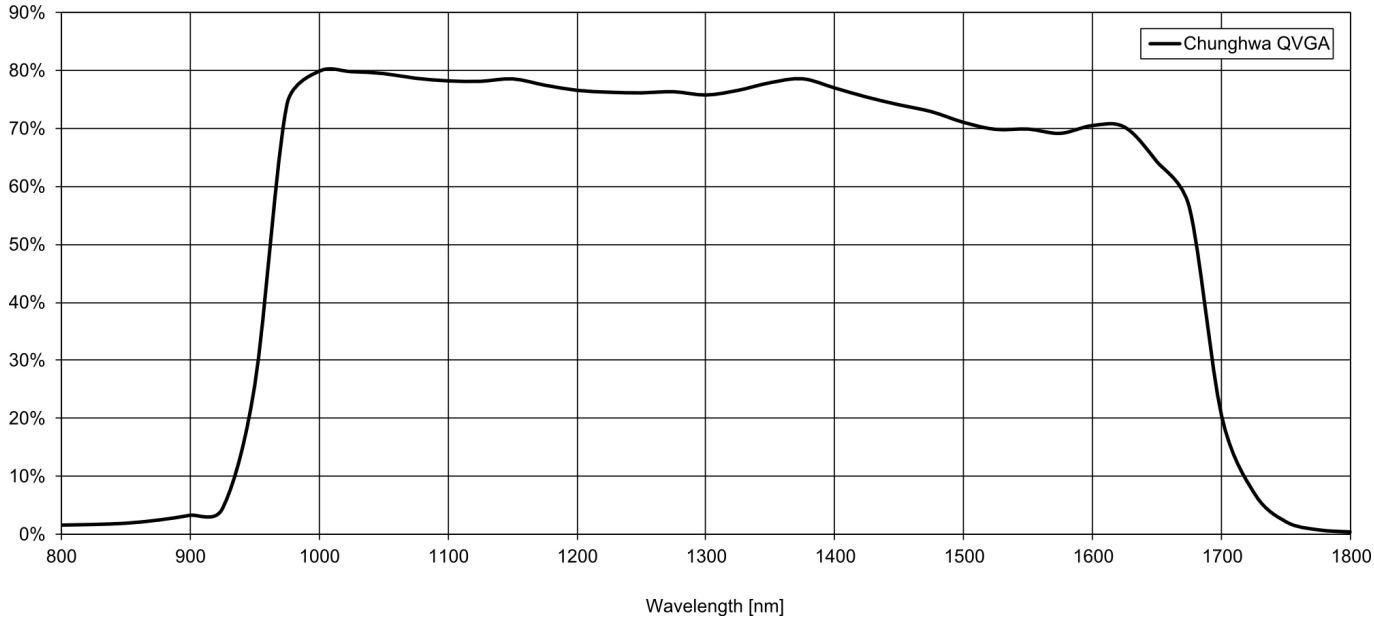

Image Sensor Specifications

Manufacturer / Type	Chunghwa, FPA-320x256-K
Technology	InGaAs with CMOS read out circuit
Optical format	1"
Optical diagonal	12.3mm
Resolution	320 x 256
Pixel size	30µm x 30µm
Active optical area	9.60mm x 7.68mm
Dark current	TBD
Read out noise	TBD
Full well capacity / SNR	3.5Me- / 1870:1
Spectral range	SWIR: 930 to 1700nm (to 10% of peak responsivity)
Responsivity	SWIR: TBD DN / (J/m²) @ 1550nm / 8bit
Quantum Efficiency	SWIR < 70% from 1000 to 1600nm
Optical fill factor	> 99%
Dynamic range	TBD dB in linear mode
Characteristic curve	Linear
Shutter mode	Global shutter

Camera Specifications

Interface	GigE
Frame rate	344fps
Pixel clock	20MHz
Camera taps	2
Greyscale resolution	8Bit / 10Bit / 12Bit / 16Bit in binning mode
Fixed pattern noise (FPN)	< 1DN RMS @ 8bit
Exposure time range	7µs - 1600ms
Analog gain	n/a
Digital gain	0.1 to 15.99 (FineGain)
Trigger Modes	Free running (non triggered), external Trigger, SWTrigger
Features	Configurable region of interest (ROI), Up to 128 regions of interest (MROI), Image correction, 2 look-up tables (12-to-8Bit) on user-defined image region (Region-LUT), Constant frame rate independent of exposure time, Crosshairs overlay on the image, Temperature stabilisation with Peltier cooler (TEC), Temperature monitoring of sensor and camera, Camera informations readable over SDK, Low trigger delay and low trigger jitter, Extended trigger input and strobe output functionality, Status line in picture
Operation temperature / moisture	0°C ... + 50°C / 20% ... 80%
Storage temperature / moisture	-25°C ... 60°C / 20% ... 95%
Power supply	+12VDC (-10%) ... +12VDC (+10%)
Power consumption	< 5W without TEC
Lens mount	C-Mount (CS-Mount optional)
I/O Inputs	2x Opto-isolated
I/O Outputs	2x Opto-isolated
Dimensions	60 x 70 x 58.9mm³
Mass	TBD g
Connector I/O (Power)	Fischer S1031Z012-130
Connector Interface	x-coded M12
Conformity	CE / RoHS / WEEE
IP Code	IP40

Connectors

Pin	I/O Type	Name	Description
1	O	ISO_OUT0	General purpose output 0 (opto-isolated)
2	O	ISO_OUT1	General purpose output 1 (opto-isolated)
3	O	RESERVED	Do not connect
4	PWR	GND	Camera ground
5	PWR	VDD	Camera power +12 V DC (± 10%)
6	PWR	ISO_GND	Signal ground for opto-isolated output signals
7	I	ISO_IN0	General purpose input 0 (opto-isolated)
8	I	ISO_IN1	General purpose input 1 (opto-isolated)
9	O	RESERVED	Do not connect
10	O	RESERVED	Do not connect
11	O	RESERVED	Do not connect
12	O	RESERVED	Do not connect

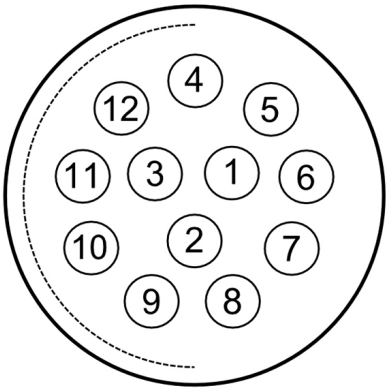

Dimensions

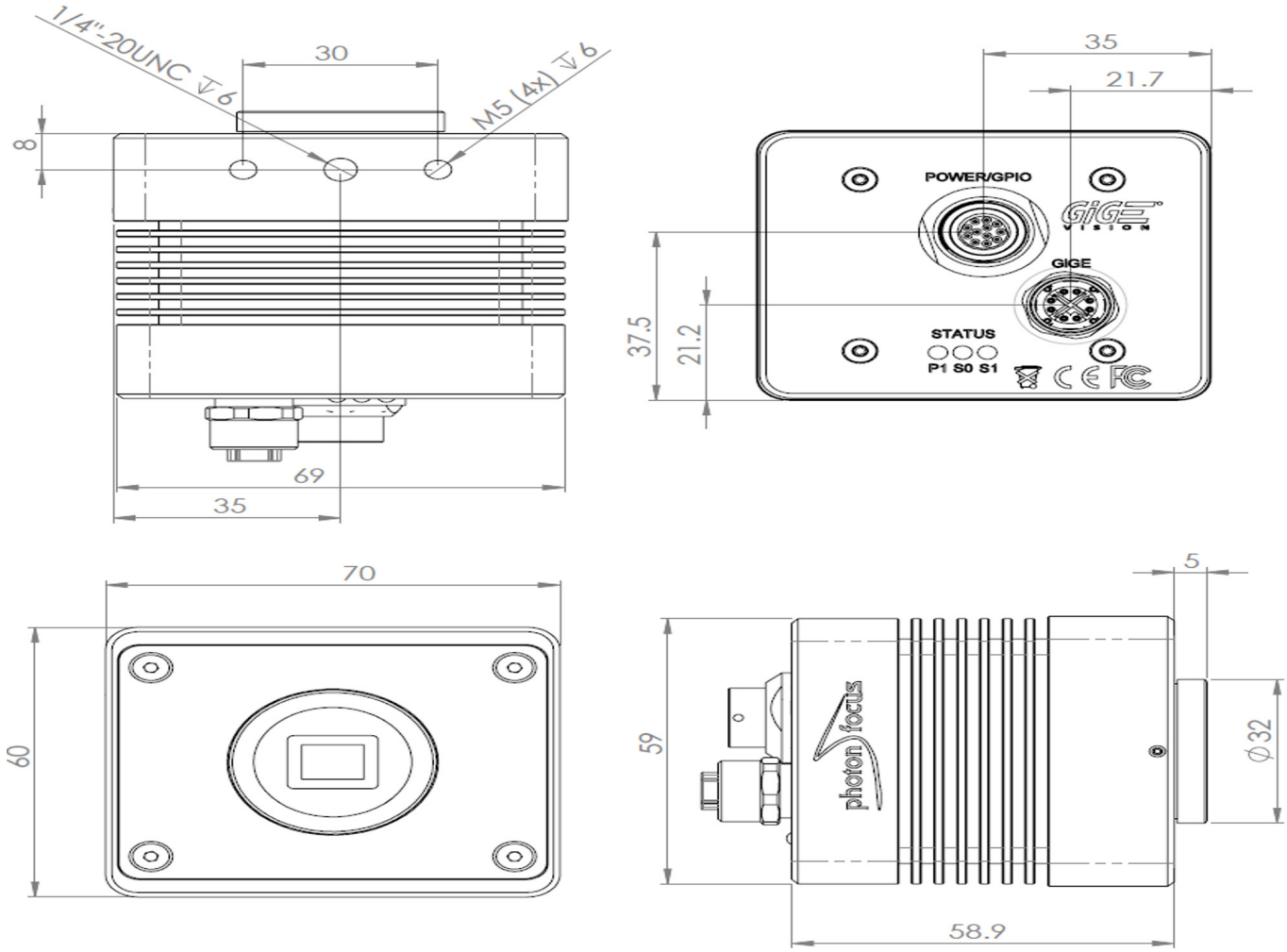

Explanation

DN DigitalNumber (equals to LSB)
e- Electrons

Order Information

MV3-D320I-T01-40-G2	SWIR model

Compatibility

Photonfocus AG
Bahnhofplatz 10
CH-8853 Lachen SZ
Switzerland

Phone: +41 55 451 00 00
www.photonfocus.com
info@photonfocus.com